SECTION CHG
CHARGING SYSTEM

CONTENTS

PRECAUTION 3

PRECAUTIONS 3
- Precaution for Supplemental Restraint System (SRS) "AIR BAG" and "SEAT BELT PRE-TENSIONER" 3
- Precaution for Power Generation Voltage Variable Control System 3

PREPARATION 4

PREPARATION 4
- Special Service Tools 4
- Commercial Service Tools 4

SYSTEM DESCRIPTION 5

COMPONENT PARTS 5

CHARGING SYSTEM 5
- CHARGING SYSTEM : Component Parts Location 5
- CHARGING SYSTEM : Alternator 5

POWER GENERATION VOLTAGE VARIABLE CONTROL SYSTEM 5
- POWER GENERATION VOLTAGE VARIABLE CONTROL SYSTEM : Component Parts Location 5
- POWER GENERATION VOLTAGE VARIABLE CONTROL SYSTEM : Alternator (IC voltage regulator) 6

SYSTEM 7

CHARGING SYSTEM 7
- CHARGING SYSTEM : System Description 7

POWER GENERATION VOLTAGE VARIABLE CONTROL SYSTEM 7
- POWER GENERATION VOLTAGE VARIABLE CONTROL SYSTEM : System Description 7

WARNING/INDICATOR/CHIME LIST 8
- WARNING/INDICATOR/CHIME LIST : Warning Lamps/Indicator Lamps 8

WIRING DIAGRAM 9

CHARGING SYSTEM 9
- Wiring Diagram 9

BASIC INSPECTION 13

DIAGNOSIS AND REPAIR WORK FLOW 13
- Work Flow (With EXP-800 NI or GR8-1200 NI) 13
- Work Flow (Without EXP-800 NI or GR8-1200 NI) 17

CHARGING SYSTEM PRELIMINARY INSPECTION 20
- Inspection Procedure 20

POWER GENERATION VOLTAGE VARIABLE CONTROL SYSTEM OPERATION INSPECTION 21
- Inspection Procedure 21

DTC/CIRCUIT DIAGNOSIS 23

B TERMINAL CIRCUIT 23
- Diagnosis Procedure 23

L TERMINAL CIRCUIT (OPEN) 24
- Diagnosis Procedure 24

L TERMINAL CIRCUIT (SHORT) 25
- Diagnosis Procedure 25

S TERMINAL CIRCUIT 26
- Diagnosis Procedure 26

SYMPTOM DIAGNOSIS 27

CHARGING SYSTEM 27
- Symptom Table 27

REMOVAL AND INSTALLATION 28

ALTERNATOR **28**

VQ37VHR **28**
VQ37VHR : Exploded View 28
VQ37VHR : Removal and Installation 28
VQ37VHR : Inspection 30

SERVICE DATA AND SPECIFICATIONS (SDS) **31**

SERVICE DATA AND SPECIFICATIONS (SDS) **31**
Alternator 31

PRECAUTION

PRECAUTIONS

Precaution for Supplemental Restraint System (SRS) "AIR BAG" and "SEAT BELT PRE-TENSIONER"

INFOID:0000000011282140

The Supplemental Restraint System such as “AIR BAG” and “SEAT BELT PRE-TENSIONER”, used along with a front seat belt, helps to reduce the risk or severity of injury to the driver and front passenger for certain types of collision. This system includes seat belt switch inputs and dual stage front air bag modules. The SRS system uses the seat belt switches to determine the front air bag deployment, and may only deploy one front air bag, depending on the severity of a collision and whether the front occupants are belted or unbelted.
Information necessary to service the system safely is included in the “SRS AIR BAG” and “SEAT BELT” of this Service Manual.

WARNING:
Always observe the following items for preventing accidental activation.
- **To avoid rendering the SRS inoperative, which could increase the risk of personal injury or death in the event of a collision that would result in air bag inflation, all maintenance must be performed by an authorized NISSAN/INFINITI dealer.**
- **Improper maintenance, including incorrect removal and installation of the SRS, can lead to personal injury caused by unintentional activation of the system. For removal of Spiral Cable and Air Bag Module, see “SRS AIR BAG”.**
- **Never use electrical test equipment on any circuit related to the SRS unless instructed to in this Service Manual. SRS wiring harnesses can be identified by yellow and/or orange harnesses or harness connectors.**

PRECAUTIONS WHEN USING POWER TOOLS (AIR OR ELECTRIC) AND HAMMERS

WARNING:
Always observe the following items for preventing accidental activation.
- **When working near the Air Bag Diagnosis Sensor Unit or other Air Bag System sensors with the ignition ON or engine running, never use air or electric power tools or strike near the sensor(s) with a hammer. Heavy vibration could activate the sensor(s) and deploy the air bag(s), possibly causing serious injury.**
- **When using air or electric power tools or hammers, always switch the ignition OFF, disconnect the battery, and wait at least 3 minutes before performing any service.**

Precaution for Power Generation Voltage Variable Control System

INFOID:0000000011282141

CAUTION:
For this model, the battery current sensor that is installed to the battery cable at the negative terminal measures the charging/discharging current of the battery, and performs various controls. If the electrical component or the ground wire is connected directly to the battery terminal, the current other than that being measured with the battery current sensor is charging to or discharging from the battery. This condition causes the malfunction of the control, and then the battery discharge may occur. Do not connect the electrical component or the ground wire directly to the battery terminal.

PREPARATION

PREPARATION

Special Service Tools

INFOID:0000000011282142

Tool number (Kent-Moore No.) Tool name	Description
— (—) Model GR8-1200 NI Multitasking battery and electrical diagnostic station  AWIIA1239ZZ	Tests batteries, starting and charging systems and charges batteries. For operating instructions, refer to diagnostic station instruction manual.
— (—) Model EXP-800 NI Battery and electrical diagnostic analyzer 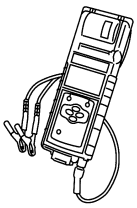 JSMIA0806ZZ	Tests batteries and charging systems. For operating instructions, refer to diagnostic analyzer instruction manual.

Commercial Service Tools

INFOID:0000000011282143

Tool name	Description
Power tool 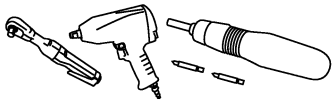 PIIB1407E	Loosening bolts, nuts and screws

SYSTEM DESCRIPTION

COMPONENT PARTS

CHARGING SYSTEM

CHARGING SYSTEM : Component Parts Location

INFOID:0000000011282144

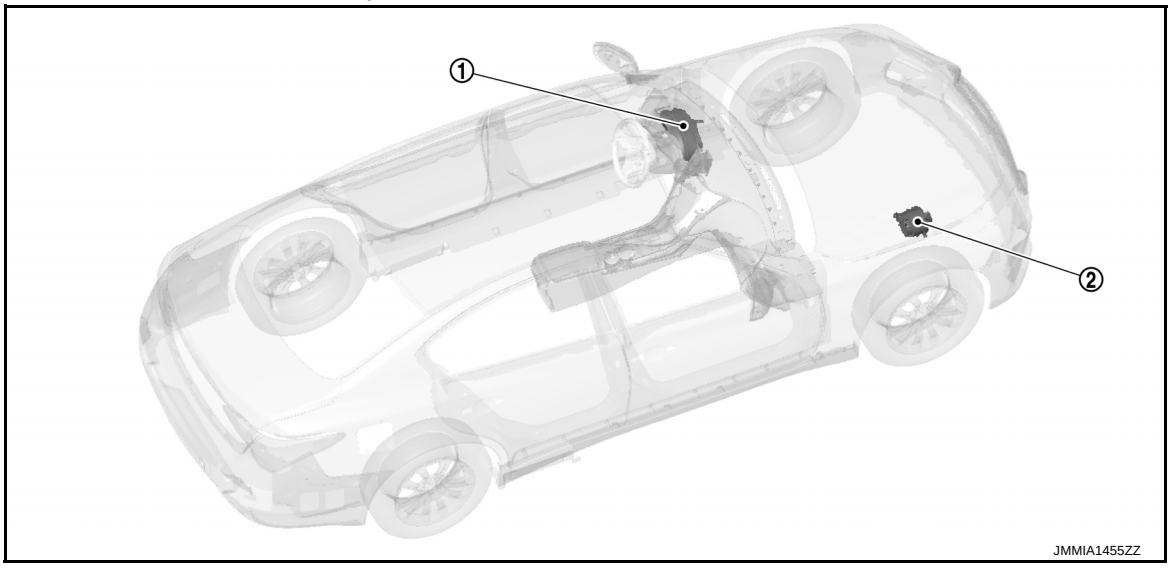

No.	Component	Function
①	Combination meter (Charge warning lamp)	The IC voltage regulator warning function activates to illuminate the charge warning lamp, if any of the following symptoms occur while alternator is operating: • Excessive voltage is produced. • No voltage is produced.
②	Alternator	Refer toCHG-5, "CHARGING SYSTEM : Alternator".

CHARGING SYSTEM : Alternator

INFOID:0000000011282145

The alternator provides DC voltage to operate the vehicle's electrical system and to keep the battery charged. The voltage output is controlled by the IC voltage regulator.

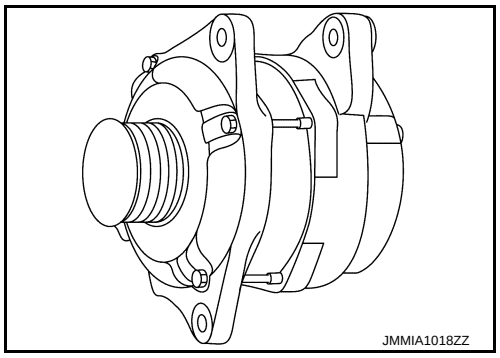

POWER GENERATION VOLTAGE VARIABLE CONTROL SYSTEM

POWER GENERATION VOLTAGE VARIABLE CONTROL SYSTEM : Component

Parts Location

INFOID:0000000011282146

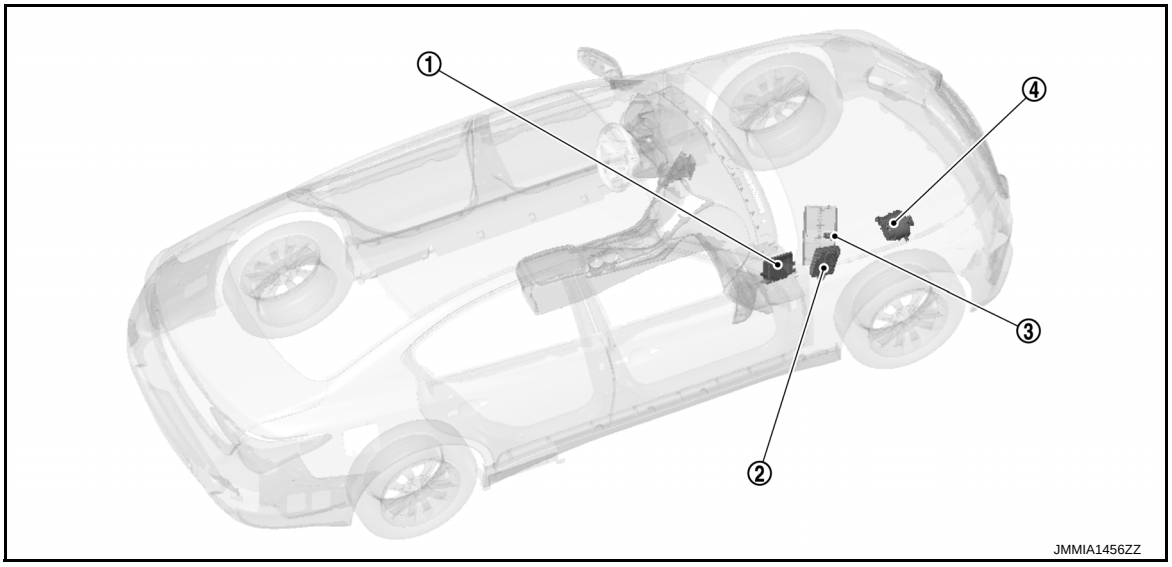

No.	Component	Function
①	ECM	ECM judges whether to perform the power generation voltage variable control according to the battery condition. When performing the power generation voltage variable control, ECM calculates the target power generation voltage according to the battery condition and sends the calculated value as the power generation command value signal to IPDM E/R. Refer to EC-17, "ENGINE CONTROL SYSTEM : Component Parts Location" for detailed installation location.
②	IPDM E/R	IPDM E/R converts the received power generation command value into the power generation command signal (PWM signal) and sends it to the IC voltage regulator. Refer to PCS-5, "Component Parts Location" for detailed installation location.
③	Battery current sensor	Battery current sensor is installed to the battery cable at the negative terminal, and it detects the charging/discharging current of the battery and sends the voltage signal to ECM according to the current value. Refer to EC-25, "Battery Current Sensor (With Battery Temperature Sensor)".
④	Alternator (IC voltage regulator)	Refer to CHG-6, "POWER GENERATION VOLTAGE VARIABLE CONTROL SYSTEM : Alternator (IC voltage regulator)".

POWER GENERATION VOLTAGE VARIABLE CONTROL SYSTEM : Alternator (IC voltage regulator)

INFOID:0000000011282147

The output voltage of the alternator is controlled by the IC voltage regulator inside the alternator.
IC voltage regulator controls the power generation voltage by the target power generation voltage based on the received power generation command signal (PWM signal).
When there is no power generation command signal (PWM signal), the alternator performs the normal power generation according to the characteristic of the IC voltage regulator.

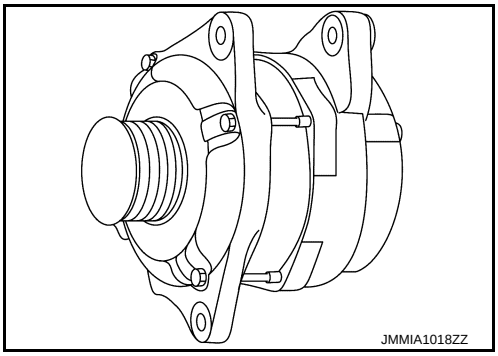

SYSTEM

CHARGING SYSTEM

CHARGING SYSTEM : System Description

INFOID:0000000011282148

SYSTEM DIAGRAM

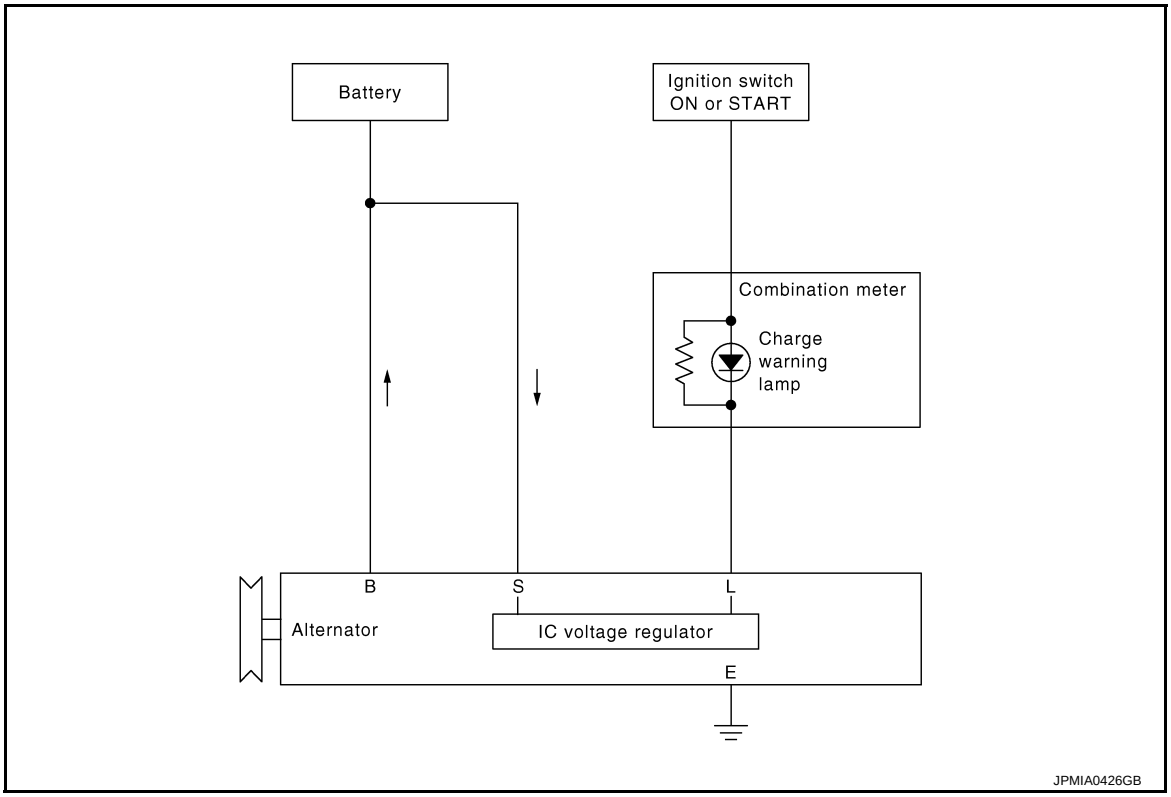

SYSTEM DESCRIPTION

- “B” terminal circuit supplies power to charge the battery and to operate the vehicle’s electrical system.
- “L” terminal circuit controls the charge warning lamp. The charge warning lamp illuminates when the ignition switch is set to ON or START. When the alternator is providing sufficient voltage with the engine running, the charge warning lamp will go off. If the charge warning lamp illuminates with the engine running, a malfunction is indicated.
  Refer to MWI-23, "WARNING LAMPS/INDICATOR LAMPS : Charge Warning Lamp".
- “S” terminal circuit detects the battery voltage to adjust the alternator output voltage with the IC voltage regulator.

POWER GENERATION VOLTAGE VARIABLE CONTROL SYSTEM

POWER GENERATION VOLTAGE VARIABLE CONTROL SYSTEM : System De-

scription

INFOID:0000000011282149

SYSTEM DIAGRAM

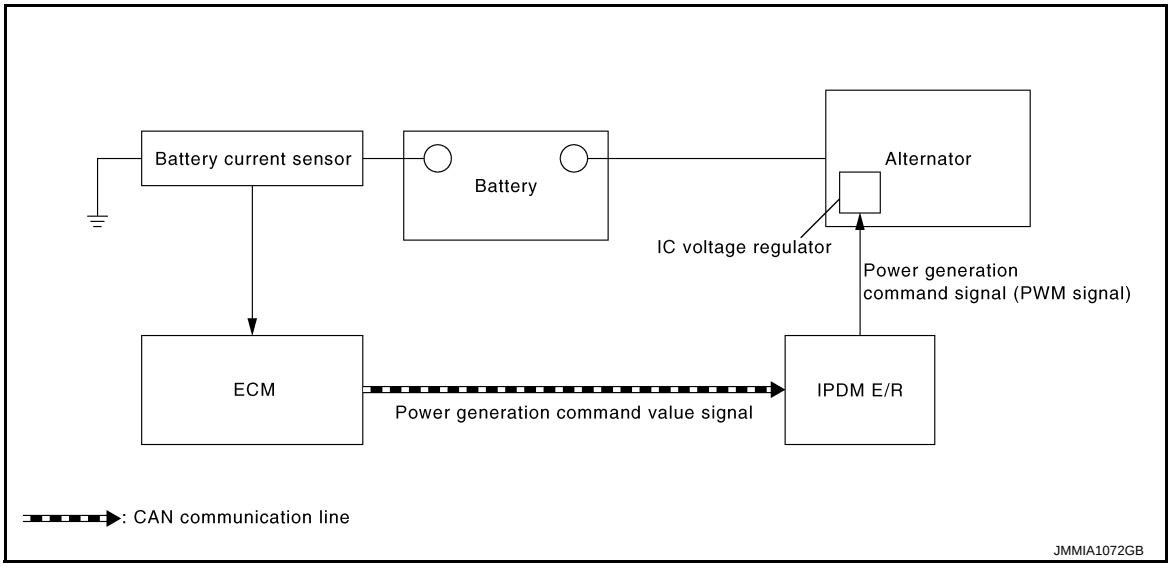

SYSTEM DESCRIPTION

By performing the power generation voltage variable control, the engine load due to the power generation of the alternator is reduced and fuel consumption is decreased.

NOTE:

When any malfunction is detected in the power generation voltage variable control system, the power generation is performed according to the characteristic of the IC voltage regulator of the alternator.

WARNING/INDICATOR/CHIME LIST

WARNING/INDICATOR/CHIME LIST : Warning Lamps/Indicator Lamps

INFOID:0000000011282150

Item	Design	Reference
Charge warning lamp		For layout, refer to MWI-8, "METER SYSTEM : Design".
		For function, refer to MWI-23, "WARNING LAMPS/INDICATOR LAMPS : Charge Warning Lamp".

WIRING DIAGRAM

CHARGING SYSTEM

Wiring Diagram

INFOID:0000000011282151

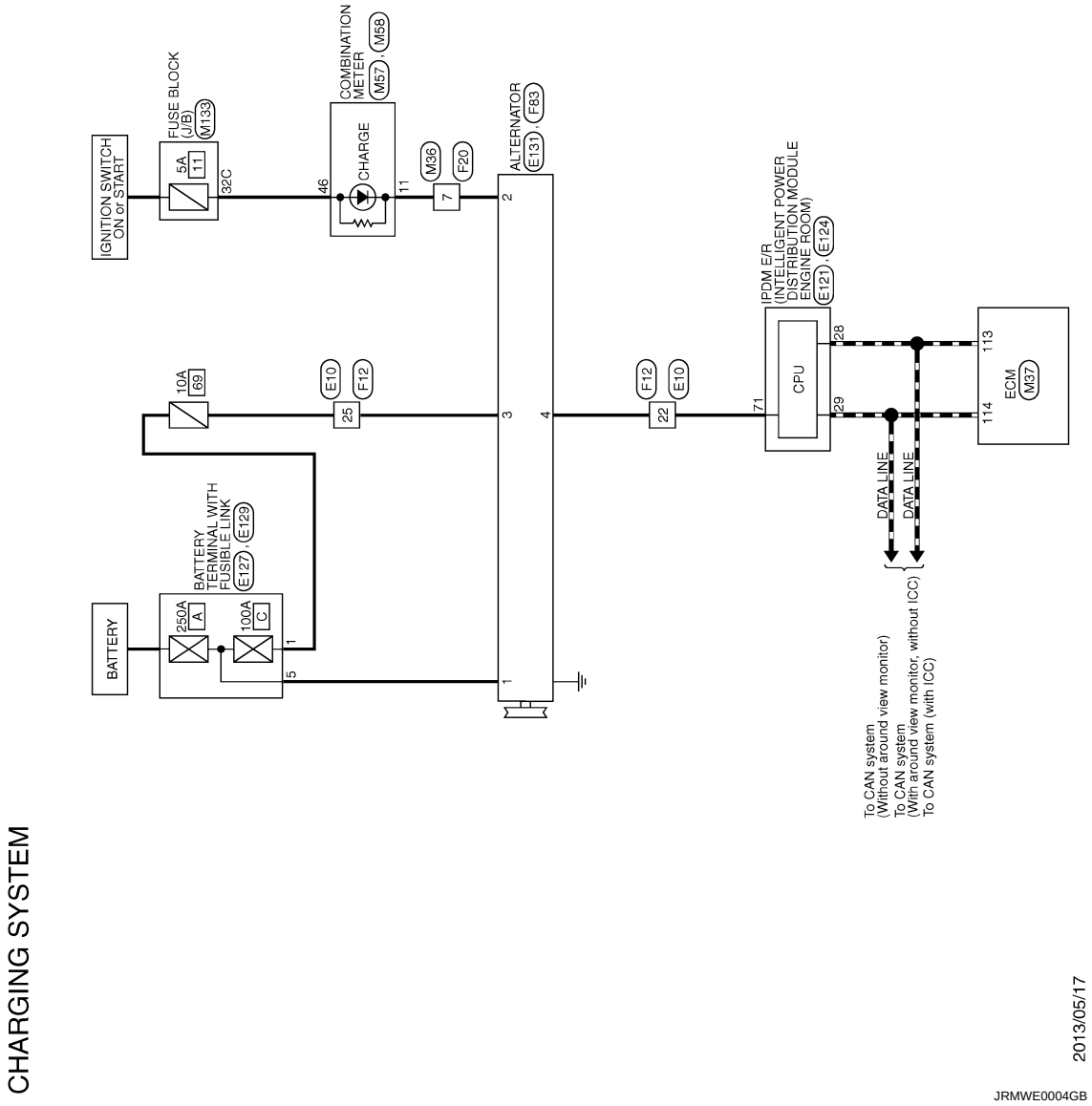

CHARGING SYSTEM

Connector No.	E10
Connector Name	WIRE TO WIRE
Connector Type	SAA36MB-RS8-SHZ8

H.S.

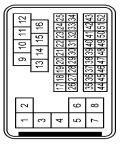

Terminal No.	Color Of Wire	Signal Name [Specification]
1	L/Y	-
2	SHIELD	-
3	L/B	-
4	SHIELD	-
5	BR	-
6	SB	-
7	G	-
8	W	-
9	W	-
10	Y	-
11	P	-
12	SB	-
13	L	-
14	G	-
15	LG	-
16	BR	-
17	L	-
18	P	-
19	GR	-
20	G	-
21	V	-
22	Y	-
23	L	-
24	GR	-
25	V	-
26	BR	-
27	W	-
28	V	-
29	BR	-
30	R	-
31	P	-
32	G	-
33	B	-
34	BG	-
35	LG	-
36	W	-
37	SHIELD	-
38	L	-
39	P	-
40	R	-
41	W	-
42	LG	-
43	G	-
44	V	-
45	Y	-
46	SHIELD	-
47	W	-
48	BR	-
49	G	-
50	B	-
51	SB	-
52	R	-

Connector No.	E121
Connector Name	IPDM E/R (INTELLIGENT POWER DISTRIBUTION MODULE ENGINE ROOM)
Connector Type	TH32FW-NH

H.S.

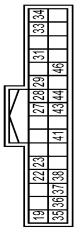

Terminal No.	Color Of Wire	Signal Name [Specification]
19	P	-
22	BG	-
23	LG	-
27	GR	-
28	P	-
29	L	-
31	G	-
33	SB	-
34	Y	-
35	G	-
36	SB	-
37	GR	-
38	BR	-
41	GR	-
43	V	-
44	GR	-
46	R	-

Connector No.	E124
Connector Name	IPDM E/R (INTELLIGENT POWER DISTRIBUTION MODULE ENGINE ROOM)
Connector Type	TH12FW-NH

H.S.

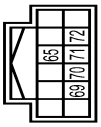

Terminal No.	Color Of Wire	Signal Name [Specification]
65	BG	-
69	R	-
70	BR	-
71	Y	-
72	P	-

Connector No.	E127
Connector Name	BATTERY TERMINAL WITH FUSIBLE LINK
Connector Type	L02FBR-MC

H.S.

Terminal No.	Color Of Wire	Signal Name [Specification]
1	G	-
2	R	-

Connector No.	E129
Connector Name	BATTERY TERMINAL WITH FUSIBLE LINK
Connector Type	24340_79905

H.S.

Terminal No.	Color Of Wire	Signal Name [Specification]
5	R	-

Connector No.	E131
Connector Name	ALTERNATOR
Connector Type	24340_65F45

H.S.

Terminal No.	Color Of Wire	Signal Name [Specification]
1	R	-

Connector No.	F12
Connector Name	WIRE TO WIRE
Connector Type	SAA36FB-RS8-SHZ8

H.S.

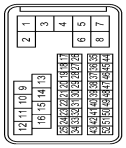

JRMWG3585GB

CHARGING SYSTEM

CHARGING SYSTEM

Terminal No.	Color Of Wire	Signal Name [Specification]
1	L/Y	-
2	SHIELD	-
3	L/B	-
4	SHIELD	-
5	BR	-
6	GR	-
7	G	-
8	W	-
9	W	-
10	G	-
11	R	-
12	P	-
13	L	-
14	LG	-
15	P	-
16	Y	-
17	L	-
18	P	-
19	GR	-
20	BG	-
21	LG	-
22	W	-
23	Y	-
24	LG	-
25	V	-
26	W	-
27	V	-
28	BR	-
29	LG	-
30	R	-
31	P	-
32	GR	-
33	B	-
34	BG	-
35	LG	-
36	SB	-
37	SHIELD	-
38	W	-
39	Y	-
40	G	-
41	B	-
42	GR	-
43	R	-
44	BG	-
45	Y	-
46	SHIELD	-
47	W	-
48	LG	-
49	L	-
50	R	-
51	SB	-
52	G	-

Connector No.	F20
Connector Name	WIRE TO WIRE
Connector Type	TK36FW-NS10

Terminal No.	Color Of Wire	Signal Name [Specification]
1	Y	-
4	R	-
5	B	-
6	W	-
7	G	-
8	BG	-
9	Y	-
10	GR	-
21	LG	-
22	B	-
31	BG	-
32	Y	-
34	BG	-

Connector No.	F83
Connector Name	ALTERNATOR
Connector Type	HS03FB

Terminal No.	Color Of Wire	Signal Name [Specification]
2	G	-
3	V	-
4	W	-

Connector No.	M36
Connector Name	WIRE TO WIRE
Connector Type	TK36MW-NS10

Terminal No.	Color Of Wire	Signal Name [Specification]
1	Y	-
4	R	-
5	B	-
6	W	-
7	W	-
8	BG	-
9	R	-
10	R	-
21	LG	-
22	B	-
31	BG	-
32	W	-
34	BG	-

Connector No.	M37
Connector Name	ECM
Connector Type	RH24FGY-RZ8-R-LH-Z

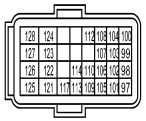

Terminal No.	Color Of Wire	Signal Name [Specification]
97	Y	ACCELERATOR PEDAL POSITION SENSOR 1
98	BR	ACCELERATOR PEDAL POSITION SENSOR 2
99	W	SENSOR POWER SUPPLY (ACCELERATOR PEDAL POSITION SENSOR 1)
100	G	SENSOR GROUND (ACCELERATOR PEDAL POSITION SENSOR 1)
101	SB	ASCD/ICC STEERING SWITCH
102	LG	EVAP CONTROL SYSTEM PRESSURE SENSOR
103	L	SENSOR POWER SUPPLY (ACCELERATOR PEDAL POSITION SENSOR 2)
104	R	SENSOR GROUND (ACCELERATOR PEDAL POSITION SENSOR 2)
105	L	REFRIGERANT PRESSURE SENSOR
106	P	FUEL TANK TEMPERATURE SENSOR
107	GR	SENSOR POWER SUPPLY (EVAP CONTROL SYSTEM PRESSURE SENSOR, REFRIGERANT PRESSURE SENSOR)
108	Y	SENSOR GROUND (ASCD/ICC STEERING SWITCH)
109	BR	TRANSMISSION RANGE SWITCH
110	V	ENGINE SPEED SIGNAL OUTPUT
112	V	GNDA PDPRES/FTPRES
113	P	CAN COMMUNICATION LINE
114	L	CAN COMMUNICATION LINE
117	V	DATA LINK CONNECTOR
121	LG	EVAP CANISTER VENT CONTROL VALVE
122	SB	STOP LAMP SWITCH
123	B	ECM GROUND
124	B	ECM GROUND
125	R	POWER SUPPLY FOR ECM
126	BG	BRAKE PEDAL POSITION SWITCH
127	B	ECM GROUND
128	B	ECM GROUND

JRMWG3586GB

CHARGING SYSTEM

Connector No.	M57
Connector Name	COMBINATION METER
Connector Type	TH40FW-NH

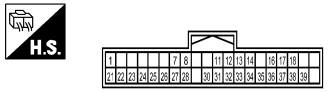

Terminal No.	Color Of Wire	Signal Name [Specification]
1	B	GROUND
7	G	SECURITY SIGNAL
8	B	-
11	W	ALTERNATOR SIGNAL
12	G	LED HEADLAMP (RH) WARNING SIGNAL
13	BR	LED HEADLAMP (LH) WARNING SIGNAL
14	V	ACC POWER SUPPLY
16	V	AIR BAG SIGNAL
17	BR	METER CONTROL SWITCH GROUND
18	SB	TRIP/RESET SIGNAL
21	B	STEERING SWITCH SIGNAL GROUND
22	P	STEERING SWITCH SIGNAL A
23	W/B	STEERING SWITCH SIGNAL B
24	L	WASHER LEVEL SWITCH SIGNAL
25	LG	BRAKE FLUID LEVEL SWITCH SIGNAL
26	V	PARKING BRAKE SWITCH SIGNAL
27	G	PASSENGER SEAT BELT WARNING SIGNAL
28	W	SEAT BELT BUCKLE SWITCH SIGNAL (DRIVER SIDE)
30	SB	MANUAL MODE SIGNAL
31	G	NON-MANUAL MODE SIGNAL
32	BG	MANUAL MODE SHIFT UP SIGNAL
33	GR	MANUAL MODE SHIFT DOWN SIGNAL
34	BG	PADDLE SHIFTER UP SIGNAL
35	G	PADDLE SHIFTER DOWN SIGNAL
36	V	ILLUMINATION CONTROL SWITCH SIGNAL (+)
37	GR	ILLUMINATION CONTROL SWITCH SIGNAL (-)
38	R	VEHICLE SPEED SIGNAL (8-PULSE)
39	L	VEHICLE SPEED SIGNAL (2-PULSE)

Connector No.	M58
Connector Name	COMBINATION METER
Connector Type	TH12FW-NH

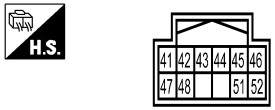

Terminal No.	Color Of Wire	Signal Name [Specification]
41	L	CAN-H
42	P	CAN-L
43	B	ILLUMINATION CONTROL SIGNAL
44	Y	FUEL LEVEL SENSOR GROUND
45	W	BATTERY POWER SUPPLY
46	R	IGNITION SIGNAL
47	LG	AV COMMUNICATION SIGNAL (H)
48	SB	AV COMMUNICATION SIGNAL (L)
51	BR	FUEL LEVEL SENSOR SIGNAL
52	B	GROUND

Connector No.	M133
Connector Name	FUSE BLOCK (J/B)
Connector Type	TH40FW-NH

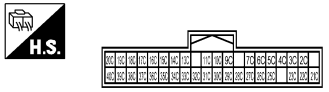

Terminal No.	Color Of Wire	Signal Name [Specification]
10C	V	-
11C	V	-
13C	L	-
14C	Y	-
15C	R	-
16C	R	-
17C	L	-
18C	BG	- [Without DRPO]
18C	P	- [With DRPO]
19C	B	-
20C	W	-
21C	L	-
22C	L	-
23C	L	-
25C	LG	-
26C	SB	-
27C	P	-
28C	W	-
29C	W	-
2C	R	-
30C	R	-
31C	W	-
32C	R	-
33C	B	-
34C	W/B	-
35C	SB	-
36C	R	-
37C	W	-
38C	SB	-
39C	V	-
3C	P	-
40C	G	-
4C	P	-
5C	P	-
6C	G	-
7C	G	-
9C	V	-

JRMWG3587GB

BASIC INSPECTION

DIAGNOSIS AND REPAIR WORK FLOW

Work Flow (With EXP-800 NI or GR8-1200 NI)

INFOID:0000000011282152

CHARGING SYSTEM DIAGNOSIS WITH EXP-800 NI OR GR8-1200 NI

To test the charging system, use the following special service tools:

- EXP-800 NI Battery and electrical diagnostic analyzer
- GR8-1200 NI Multitasking battery and electrical diagnostic station

NOTE:

Refer to the applicable Instruction Manual for proper charging system diagnosis procedures.

OVERALL SEQUENCE

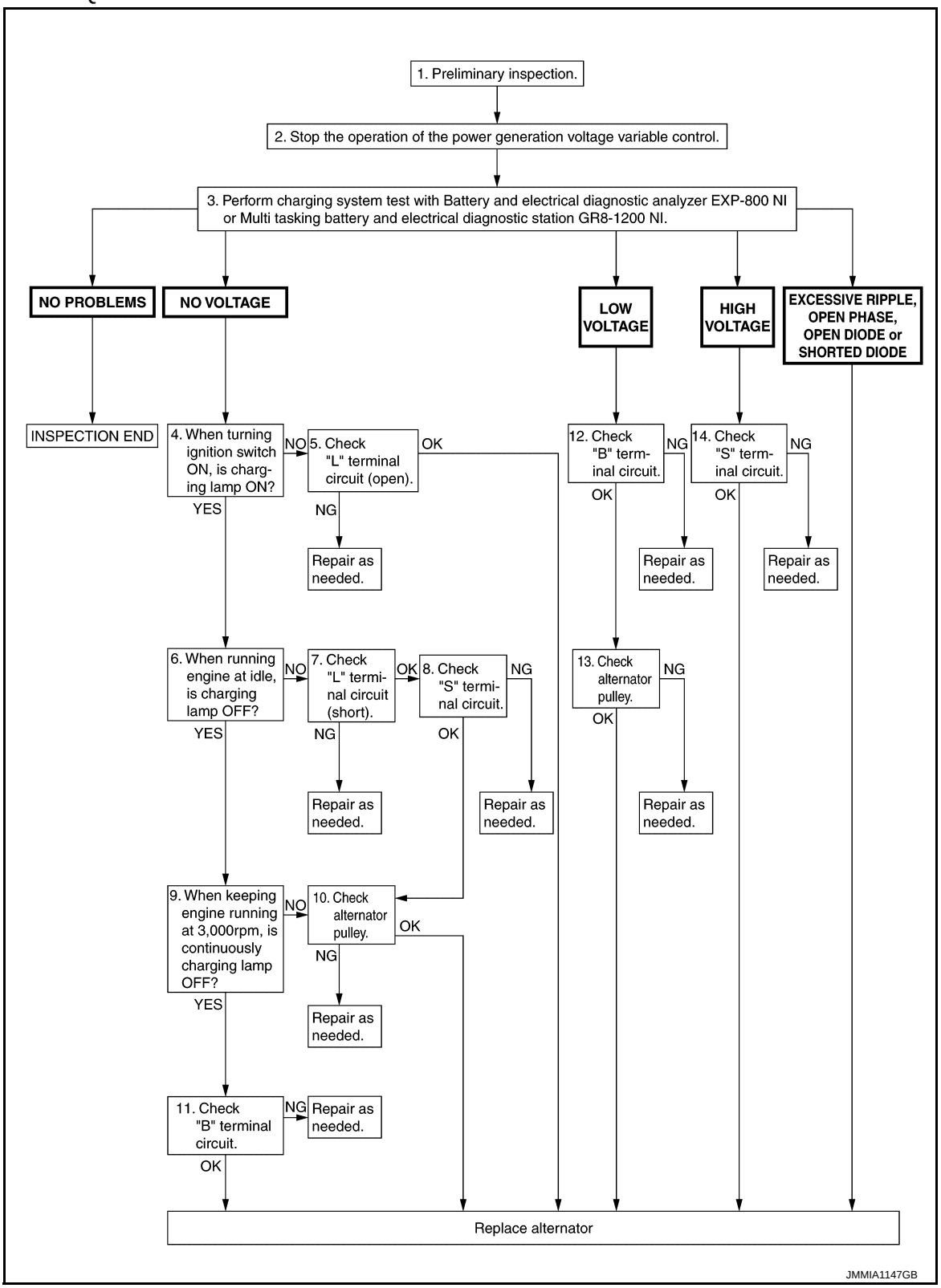

DETAILED FLOW

NOTE:

To ensure a complete and thorough diagnosis, the battery, starter and alternator test segments must be done as a set from start to finish.

1. PRELIMINARY INSPECTION

Perform the preliminary inspection. Refer to CHG-20, "Inspection Procedure".

>> GO TO 2.

2. STOP POWER GENERATION VOLTAGE VARIABLE CONTROL SYSTEM

Stop the operation of the power generation voltage variable control in either of the following procedures.

- After selecting “ENGINE” of “SELECT SYSTEM” using CONSULT, set the DUTY value of “ALTERNATOR DUTY” to 0 % by selecting “ALTERNATOR DUTY” of “Active Test”. Continue “Active Test” until the end of inspection. (When the DUTY value is 0 or 100 %, the normal power generation is performed according to the characteristic of the IC voltage regulator of the alternator.)
- Turn the ignition switch OFF, and disconnect the battery current sensor connector. [However, DTC (P1550 - P1554) of the engine might remain. After finishing the inspection, connect the battery current sensor connector and erase the self-diagnosis results history of the engine using CONSULT.]

>> GO TO 3.

3. DIAGNOSIS WITH EXP-800 NI OR GR8-1200 NI

Perform the charging system test using Multitasking battery and electrical diagnostic station GR8-1200 NI or Battery and electrical diagnostic analyzer EXP-800 NI. Refer to the applicable Instruction Manual for proper testing procedures.

Test result

NO PROBLEMS>>Charging system is normal and will also show “DIODE RIPPLE” test result.
NO VOLTAGE>>GO TO 4.
LOW VOLTAGE>>GO TO 12.
HIGH VOLTAGE>>GO TO 14.
EXCESSIVE RIPPLE, OPEN PHASE, OPEN DIODE or SHORTED DIODE>>Replace the alternator. Perform “DIODE RIPPLE” test again using Multitasking battery and electrical diagnostic station GR8-1200 NI or Battery and electrical diagnostic analyzer EXP-800 NI to confirm repair.

4. INSPECTION WITH CHARGE WARNING LAMP (IGNITION SWITCH IS ON)

Turn the ignition switch ON.

Does the charge warning lamp illuminate?

YES >> GO TO 6.
NO >> GO TO 5.

5. “L” TERMINAL CIRCUIT (OPEN) INSPECTION

Check “L” terminal circuit (open). Refer to CHG-24, "Diagnosis Procedure".

Is the “L” terminal circuit normal?

YES >> Replace alternator. Refer to CHG-28, "VQ37VHR : Removal and Installation".
NO >> Repair as needed.

6. INSPECTION WITH CHARGE WARNING LAMP (IDLING)

Start the engine and run it at idle.

Does the charge warning lamp turn OFF?

YES >> GO TO 9.
NO >> GO TO 7.

7. “L” TERMINAL CIRCUIT (SHORT) INSPECTION

Check “L” terminal circuit (short). Refer to CHG-25, "Diagnosis Procedure".

Is the “L” terminal circuit normal?

YES >> GO TO 8.
NO >> Repair as needed.

8. “S” TERMINAL CIRCUIT INSPECTION

Check “S” terminal circuit. Refer to CHG-26, "Diagnosis Procedure".

Is the “S” terminal circuit normal?

YES >> GO TO 10.
NO >> Repair as needed.

9. INSPECTION WITH CHARGE WARNING LAMP (ENGINE AT 3,000 RPM)

Increase and maintain the engine speed at 3,000 rpm.

Does the charge warning lamp remain off?

YES >> GO TO 11.
NO >> GO TO 10.

10. INSPECTION OF ALTERNATOR PULLEY

Check alternator pulley. Refer to CHG-30, "VQ37VHR : Inspection".

Is alternator pulley normal?

YES >> Replace alternator. Refer to CHG-28, "VQ37VHR : Removal and Installation".
NO >> Repair as needed.

11. “B” TERMINAL CIRCUIT INSPECTION

Check “B” terminal circuit. Refer to CHG-23, "Diagnosis Procedure".

Is “B” terminal circuit normal?

YES >> Replace alternator. Refer to CHG-28, "VQ37VHR : Removal and Installation".
NO >> Repair as needed.

12. “B” TERMINAL CIRCUIT INSPECTION

Check “B” terminal circuit. Refer to CHG-23, "Diagnosis Procedure".

Is “B” terminal circuit normal?

YES >> GO TO 13.
NO >> Repair as needed.

13. INSPECTION OF ALTERNATOR PULLEY

Check alternator pulley. Refer to CHG-30, "VQ37VHR : Inspection".

Is alternator pulley normal?

YES >> Replace alternator. Refer to CHG-28, "VQ37VHR : Removal and Installation".
NO >> Repair as needed.

14. “S” TERMINAL CIRCUIT INSPECTION

Check “S” terminal circuit. Refer to CHG-26, "Diagnosis Procedure".

Is the “S” terminal circuit normal?

YES >> Replace alternator. Refer to CHG-28, "VQ37VHR : Removal and Installation".
NO >> Repair as needed.

Work Flow (Without EXP-800 NI or GR8-1200 NI)

INFOID:0000000011282153

OVERALL SEQUENCE

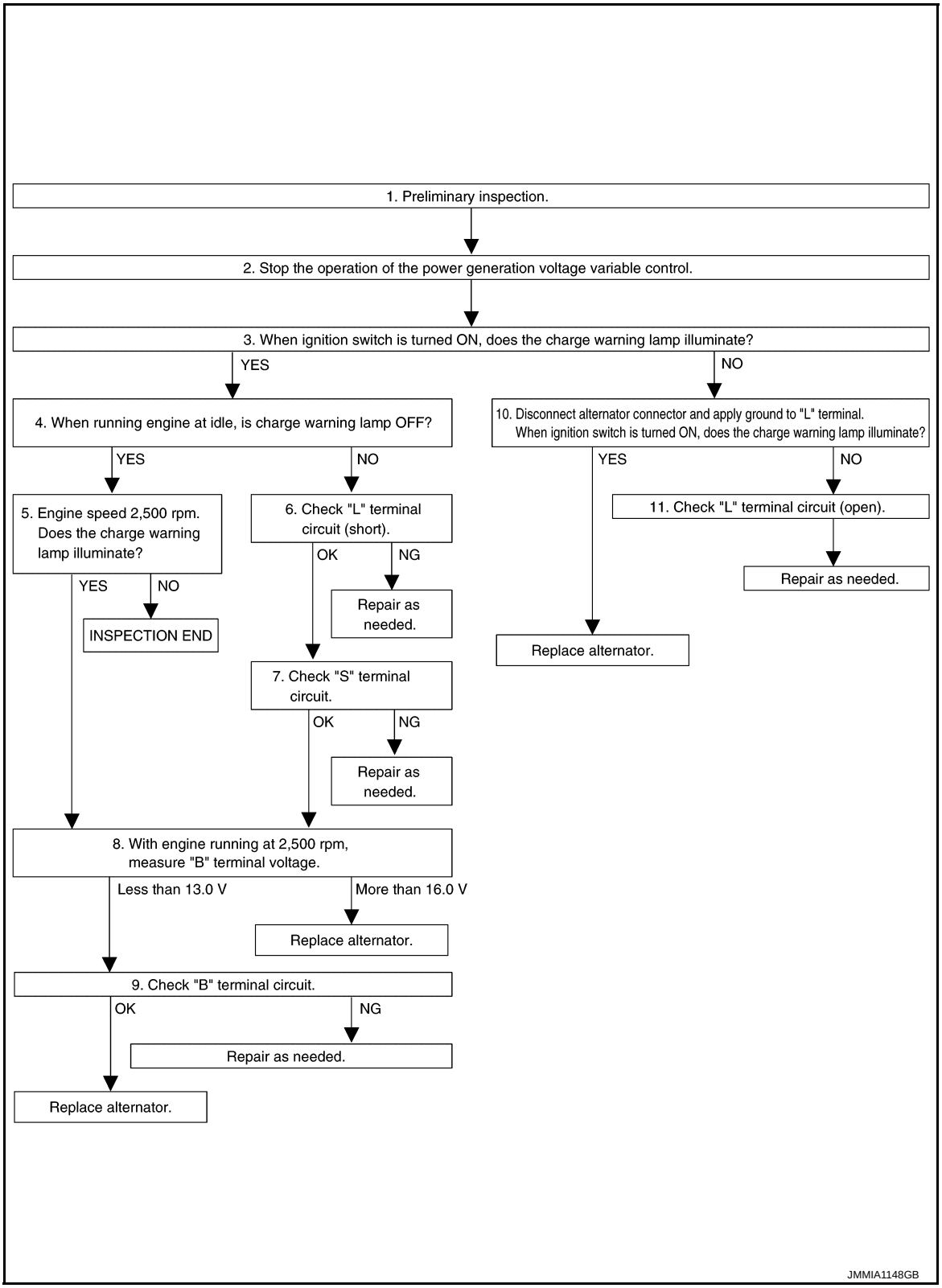

DETAILED FLOW

1. PRELIMINARY INSPECTION

Perform the preliminary inspection. Refer to CHG-20, "Inspection Procedure".

>> GO TO 2.

2. STOP POWER GENERATION VOLTAGE VARIABLE CONTROL SYSTEM

Stop the operation of the power generation voltage variable control in either of the following procedures.

- After selecting “ENGINE” of “SELECT SYSTEM” using CONSULT, set the DUTY value of “ALTERNATOR DUTY” to 0 % by selecting “ALTERNATOR DUTY” of “Active Test”. Continue “Active Test” until the end of inspection. (When the DUTY value is 0 or 100 %, the normal power generation is performed according to the characteristic of the IC regulator of the alternator.)
- Turn the ignition switch OFF, and disconnect the battery current sensor connector. [However, DTC (P1550 - P1554) of the engine might remain. After finishing the inspection, connect the battery current sensor connector and erase the self-diagnostic results history of the engine using CONSULT.]

>> GO TO 3.

3. INSPECTION WITH CHARGE WARNING LAMP (IGNITION SWITCH IS TURNED ON)

When ignition switch is turned ON

Does the charge warning lamp illuminate?

YES >> GO TO 4.
NO >> GO TO 10.

4. INSPECTION WITH CHARGE WARNING LAMP (IDLING)

Start the engine and run it at idle.

Does the charge warning lamp turn OFF?

YES >> GO TO 5.
NO >> GO TO 6.

5. INSPECTION WITH CHARGE WARNING LAMP (ENGINE AT 2,500 RPM)

Increase and maintain the engine speed at 2,500 rpm.

Does the charge warning lamp illuminate?

YES >> GO TO 8.
NO >> INSPECTION END

6. “L” TERMINAL CIRCUIT (SHORT) INSPECTION

Check “L” terminal circuit (short). Refer to CHG-25, "Diagnosis Procedure".

Is the inspection result normal?

YES >> GO TO 7.
NO >> Repair as needed.

7. “S” TERMINAL CIRCUIT INSPECTION

Check “S” terminal circuit. Refer to CHG-26, "Diagnosis Procedure".

Is the inspection result normal?

YES >> GO TO 8.
NO >> Repair as needed.

8. MEASURE “B” TERMINAL VOLTAGE

Start engine. With engine running at 2,500 rpm, measure “B” terminal voltage.

What voltage does the measurement result show?

Less than 13.0 V>>GO TO 9.
More than 16.0 V>>Replace alternator. Refer to CHG-28, "VQ37VHR : Removal and Installation".

9. “B” TERMINAL CIRCUIT INSPECTION

Check “B” terminal circuit. Refer to CHG-23, "Diagnosis Procedure".

Is the inspection result normal?

YES >> Replace alternator. Refer to CHG-28, "VQ37VHR : Removal and Installation".
NO >> Repair as needed.

10. INSPECTION WITH CHARGE WARNING LAMP (IGNITION SWITCH IS ON)

1. Disconnect alternator connector and apply ground to “L” terminal.
2. Turn the ignition switch ON.

Does the charge warning lamp illuminate?

YES >> Replace alternator. Refer to CHG-28, "VQ37VHR : Removal and Installation".
NO >> GO TO 11.

11. CHECK “L” TERMINAL CIRCUIT (OPEN)

Check “L” terminal circuit (open). Refer to CHG-24, "Diagnosis Procedure".

>> Repair as needed.

CHARGING SYSTEM PRELIMINARY INSPECTION

Inspection Procedure

INFOID:0000000011282154

1. CHECK BATTERY TERMINALS CONNECTION

Check if battery terminals are clean and tight.

Is the inspection result normal?

YES >> GO TO 2.
NO >> Repair battery terminals connection.

2. CHECK FUSE

Check for blown fuse and fusible link.

Unit	Power source (Power supply terminals)	Fuse No.
Alternator	Battery (“S” terminal)	69
Combination meter	Ignition switch ON (“L” terminal)	11

Is the inspection result normal?

YES >> GO TO 3.
NO >> Be sure to eliminate the cause of malfunction before installing new fuse.

3. CHECK “E” TERMINAL CONNECTION

Check if “E” terminal (alternator ground harness) is clean and tight.

Is the inspection result normal?

YES >> GO TO 4.
NO >> Repair “E” terminal connection.

4. CHECK DRIVE BELT TENSION

Check drive belt tension. Refer to EM-20, "Checking".

Is the inspection result normal?

YES >> INSPECTION END
NO >> Repair as needed.

POWER GENERATION VOLTAGE VARIABLE CONTROL SYSTEM OPERATION INSPECTION

Inspection Procedure

INFOID:0000000011282155

CAUTION:
When performing this inspection, always use a charged battery that has completed the battery inspection. (When the charging rate of the battery is low, the response speed of the voltage change will become slow. This can cause an incorrect inspection.)

1. CHECK ECM (CONSULT)

Perform ECM self-diagnosis with CONSULT. Refer to EC-75, "CONSULT Function".

Self-diagnostic results content

No malfunction detected>> GO TO 2.
Malfunction detected>> Check applicable parts, and repair or replace corresponding parts.

2. CHECK OPERATION OF POWER GENERATION VOLTAGE VARIABLE CONTROL SYSTEM

1. Connect CONSULT and start the engine.
2. The selector lever is in “P” or “N” position and all of the electric loads and A/C, etc. are turned OFF.
3. Select “ALTERNATOR DUTY” at “Active Test” of “ENGINE”, and then check the value of “BATTERY VOLT” monitor when DUTY value of “ALTERNATOR DUTY” is set to 40.0 %.

“BATTERY VOLT”	
2 seconds after setting the DUTY value of “ALTERNATOR DUTY” to 40.0 %	**: 12 - 13.6 V**

4. Check the value of “BATTERY VOLT” monitor when DUTY value of “ALTERNATOR DUTY” is set to 80.0%.

“BATTERY VOLT”	
20 seconds after setting the DUTY value of “ALTERNATOR DUTY” to 80.0 %	**: +0.5 V or more against the value of “BATTERY VOLT” monitor when DUTY value is 40.0 %**

Is the measurement value within the specification?

YES >> INSPECTION END
NO >> GO TO 3.

3. CHECK IPDM E/R (CONSULT)

Perform IPDM E/R self-diagnosis with CONSULT. Refer to PCS-13, "CONSULT Function (IPDM E/R)".

Self-diagnostic results content

No malfunction detected>> GO TO 4.
Malfunction detected>> Check applicable parts, and repair or replace corresponding parts.

4. CHECK HARNESS BETWEEN ALTERNATOR AND IPDM E/R

1. Turn ignition switch OFF.
2. Disconnect alternator connector and IPDM E/R connector.
3. Check continuity between alternator harness connector and IPDM E/R harness connector.

Alternator		IPDM E/R		Continuity
Connector	Terminal	Connector	Terminal	
F83	4	E124	71	Existed

4. Check continuity between alternator harness connector and ground.

Alternator		Ground	Continuity
Connector	Terminal		
F83	4		Not existed

Is the inspection result normal?

YES >> Replace IPDM E/R. Refer to PCS-38, "Removal and Installation".
NO >> Repair harness or connector between IPDM E/R and alternator.

DTC/CIRCUIT DIAGNOSIS

B TERMINAL CIRCUIT

Diagnosis Procedure

INFOID:0000000011282156

1. CHECK “B” TERMINAL CONNECTION

1. Turn ignition switch OFF.
2. Check if “B” terminal is clean and tight.

Is the inspection result normal?

YES >> GO TO 2.
NO >> Repair “B” terminal connection. Confirm repair by performing complete Charging system test using EXP-800 NI or GR8-1200 NI (if available). Refer to the applicable Instruction Manual for proper testing procedures.

2. CHECK “B” TERMINAL CIRCUIT

Check voltage between alternator “B” terminal and ground.

(+)		(–)	Voltage (Approx.)
Alternator			
Connector	Terminal		
E131	1	Ground	Battery voltage

Is the inspection result normal?

YES >> GO TO 3.
NO >> Check harness for open between alternator and fusible link.

3. CHECK “B” TERMINAL CONNECTION (VOLTAGE DROP TEST)

1. Start engine, then engine running at idle and warm.
2. Check voltage between battery positive terminal and alternator “B” terminal.

(+)	(–)		Voltage (Approx.)
	Alternator		
	Connector	Terminal	
Battery positive terminal	E131	1	Less than 0.2 V

Is the inspection result normal?

YES >> “B” terminal circuit is normal. Refer to CHG-13, "Work Flow (With EXP-800 NI or GR8-1200 NI)" or CHG-17, "Work Flow (Without EXP-800 NI or GR8-1200 NI)".
NO >> Check harness between battery and alternator for poor continuity.

L TERMINAL CIRCUIT (OPEN)

Diagnosis Procedure

INFOID:0000000011282157

1. CHECK “L” TERMINAL CONNECTION

1. Turn ignition switch OFF.
2. Check if “L” terminal is clean and tight.

Is the inspection result normal?

YES >> GO TO 2.
NO >> Repair “L” terminal connection. Confirm repair by performing complete Charging system test using EXP-800 NI or GR8-1200 NI (if available). Refer to the applicable Instruction Manual for proper testing procedures.

2. CHECK “L” TERMINAL CIRCUIT (OPEN)

1. Disconnect alternator connector.
2. Apply ground to alternator harness connector terminal.
3. Check condition of the charge warning lamp with the ignition switch in the ON position.

Alternator		Ground	Condition	
Connector	Terminal		Ignition switch position	Charge warning lamp
F83	2		ON	Illuminate

Does it illuminate?

YES >> “L” terminal circuit is normal. Refer to CHG-13, "Work Flow (With EXP-800 NI or GR8-1200 NI)" or CHG-17, "Work Flow (Without EXP-800 NI or GR8-1200 NI)".
NO >> GO TO 3.

3. CHECK HARNESS CONTINUITY (OPEN CIRCUIT)

1. Disconnect the battery cable from the negative terminal.
2. Disconnect the combination meter connector.
3. Check continuity between alternator harness connector and combination meter harness connector.

Alternator		Combination meter		Continuity
Connector	Terminal	Connector	Terminal	
F83	2	M57	11	Existed

Is the inspection result normal?

YES >> Replace combination meter.
NO >> Repair the harness or connector.

L TERMINAL CIRCUIT (SHORT)

Diagnosis Procedure

INFOID:0000000011282158

1. CHECK “L” TERMINAL CIRCUIT (SHORT)

1. Turn ignition switch OFF.
2. Disconnect alternator connector.
3. Turn ignition switch ON.

Does charge warning lamp illuminate?

YES >> GO TO 2.
NO >> Refer to CHG-13, "Work Flow (With EXP-800 NI or GR8-1200 NI)" or CHG-17, "Work Flow (Without EXP-800 NI or GR8-1200 NI)".

2. CHECK HARNESS CONTINUITY (SHORT CIRCUIT)

1. Turn ignition switch OFF.
2. Disconnect the battery cable from the negative terminal.
3. Disconnect combination meter connector.
4. Check continuity between combination meter harness connector and ground.

Combination meter		Ground	Continuity
Connector	Terminal		
M57	11		Not existed

Is the inspection result normal?

YES >> Replace combination meter.
NO >> Repair or replace the harness.

S TERMINAL CIRCUIT

Diagnosis Procedure

INFOID:0000000011282159

1.CHECK “S” TERMINAL CONNECTION

1. Turn ignition switch OFF.
2. Check if “S” terminal is clean and tight.

Is the inspection result normal?

YES >> GO TO 2.
NO >> Repair “S” terminal connection. Confirm repair by performing complete Charging system test using EXP-800 NI or GR8-1200 NI (if available). Refer to the applicable Instruction Manual for proper testing procedures.

2.CHECK “S” TERMINAL CIRCUIT

Check voltage between alternator harness connector and ground.

(+)		(–)	Voltage (Approx.)
Alternator			
Connector	Terminal		
F83	3	Ground	Battery voltage

Is the inspection result normal?

YES >> Refer to CHG-13, "Work Flow (With EXP-800 NI or GR8-1200 NI)" or CHG-17, "Work Flow (Without EXP-800 NI or GR8-1200 NI)".
NO >> Check harness for open between alternator and fuse.

SYMPTOM DIAGNOSIS

CHARGING SYSTEM

Symptom Table

INFOID:0000000011282160

Symptom	Reference
Discharged battery	Refer to CHG-13, "Work Flow (With EXP-800 NI or GR8-1200 NI)" or CHG-17, "Work Flow (Without EXP-800 NI or GR8-1200 NI)".
The charge warning lamp does not illuminate when the ignition switch is set to ON.	
The charge warning lamp does not turn OFF after the engine starts.	
The charging warning lamp turns ON when increasing the engine speed.	

REMOVAL AND INSTALLATION

ALTERNATOR

VQ37VHR

VQ37VHR : Exploded View

INFOID:0000000011282161

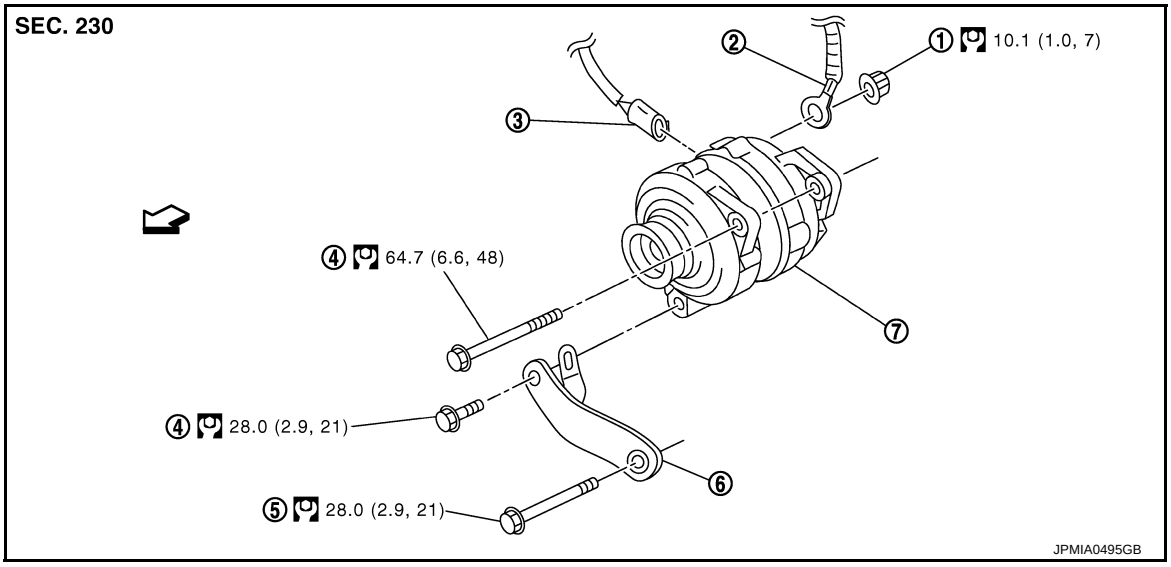

① "B" terminal nut
② "B" terminal harness
③ Alternator connector
④ Alternator mounting bolt
⑤ Alternator stay mounting bolt
⑥ Alternator stay
⑦ Alternator

⇦ : Vehicle front

: N·m (kg-m, ft-lb)

VQ37VHR : Removal and Installation

INFOID:0000000011282162

REMOVAL

2WD models

1. Disconnect the battery cable from the negative terminal. Refer to PG-122, "Removal and Installation".
2. Remove reservoir tank.
3. Remove engine under cover. Refer to EXT-35, "FRONT UNDER COVER : Removal and Installation"
4. Remove air duct (inlet). Refer to EM-30, "Removal and Installation"
5. Remove air cleaner case RH. Refer to EM-30, "Removal and Installation".
6. Remove drive belt. Refer to EM-20, "Removal and Installation"
7. Disconnect alternator connector ①.
8. Remove "B" terminal nut Ⓐ, and disconnect "B" terminal harness.
9. Remove the harness bracket bolts Ⓑ.

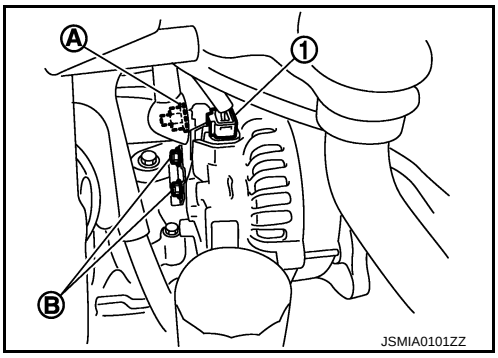

10. Remove oil pressure switch harness clip Ⓒ from alternator stay ①.
11. Disconnect oil pressure switch connector Ⓓ and oil temperature sensor connector Ⓔ.
12. Remove alternator mounting bolt Ⓑ and alternator stay mounting bolt Ⓕ, and then remove alternator stay.
13. Remove cooling fan shroud assembly. Refer to CO-20, "Removal and Installation".
14. Remove alternator mounting boltⒶ.

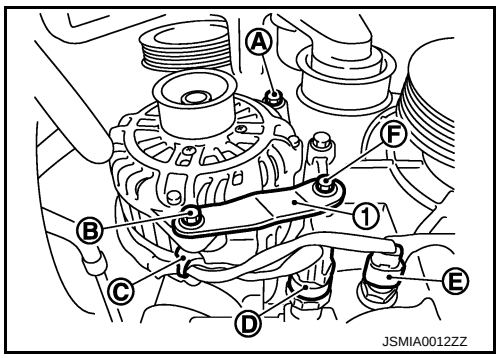

15. Remove alternator assembly upward from the vehicle.

AWD models

1. Disconnect the battery cable from the negative terminal. Refer to PG-122, "Removal and Installation"
2. Remove air duct (inlet). Refer to EM-30, "Removal and Installation"
3. Remove air cleaner case RH. Refer to EM-30, "Removal and Installation".
4. Remove reservoir tank.
5. Remove “B” terminal harness ① from harness clamp Ⓐ.
6. Remove harness clip Ⓑ from harness bracket ③.
7. Disconnect alternator connector ②.

⇦ : Vehicle front

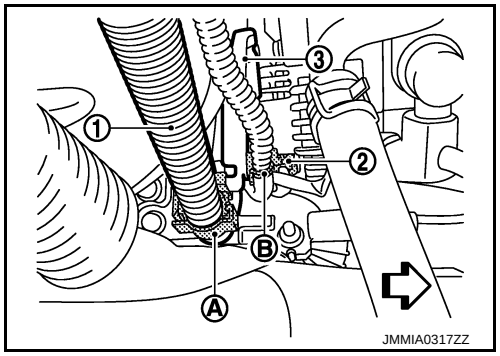

8. Remove engine under cover. Refer to EXT-35, "FRONT UNDER COVER : Removal and Installation".
9. Remove drive belt. Refer to EM-20, "Removal and Installation".
10. Remove cooling fan shroud assembly. Refer to CO-20, "Removal and Installation".
11. Remove alternator mounting bolt Ⓑ and alternator stay mounting bolt Ⓒ, and then remove alternator stay ①.
12. Remove alternator mounting bolt Ⓐ.

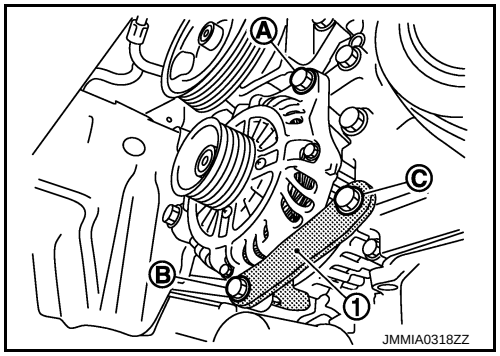

13. Pull and turn alternator, and then remove the “B” terminal nut Ⓐ and alternator connector Ⓑ.

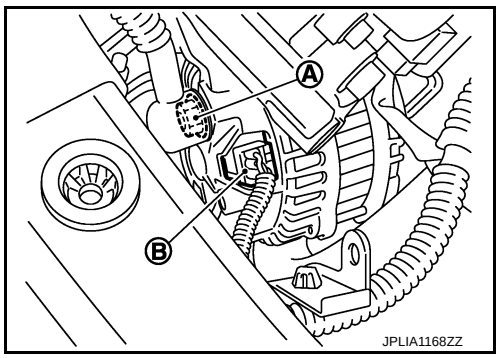

14. Remove alternator assembly upward from the vehicle.

INSTALLATION

Note the following items, and then install in the reverse order of removal.

CAUTION:

- **Be careful to tighten “B” terminal nut to the specified torque.**
- **Install alternator, and check tension of belt. Refer to EM-20, "Checking".**
- **For this model, the power generation voltage variable control system that controls the power generation voltage of the alternator has been adopted. Therefore, the power generation voltage variable control system operation inspection should be performed after replacing the alternator, and then check that the system operates normally. Refer to CHG-21, "Inspection Procedure".**

VQ37VHR : Inspection

INFOID:0000000011282163

ALTERNATOR PULLEY INSPECTION

Perform the following.

- Make sure that alternator pulley does not rattle.
- Make sure that alternator pulley nut is tight.

Use the following torque for tightening the pulley nut.

: 118 N·m (12 kg-m, 87 ft-lb)

SERVICE DATA AND SPECIFICATIONS (SDS)

SERVICE DATA AND SPECIFICATIONS (SDS)

Alternator

INFOID:0000000011282164

Applied model		VQ37VHR
Type		A003TJ1991A
		MITSUBISHI make
Nominal rating	[V - A]	12 -150
Ground polarity		Negative
Minimum revolution under no-load (When 13.5 V is applied)	[rpm]	Less than 1,300
Hot output current (When 13.5 V is applied)	[A/rpm]	More than 122/2,500 More than 144/5,000
Regulated output voltage	[V]	14.1 – 14.7*

*: Adjustment range of power generation voltage variable control is 11.4 - 15.6 V.